Cambridge Assessment International Education

Cambridge International AS & A Level

CANDIDATE NAME

CENTRE NUMBER

CANDIDATE NUMBER

9278841660

PHYSICS **9702/41**

Paper 4 A Level Structured Questions **October/November 2021**

2 hours

You must answer on the question paper.

No additional materials are needed.

INSTRUCTIONS

- Answer **all** questions.
- Use a black or dark blue pen. You may use an HB pencil for any diagrams or graphs.
- Write your name, centre number and candidate number in the boxes at the top of the page.
- Write your answer to each question in the space provided.
- Do **not** use an erasable pen or correction fluid.
- Do **not** write on any bar codes.
- You may use a calculator.
- You should show all your working and use appropriate units.

INFORMATION

- The total mark for this paper is 100.
- The number of marks for each question or part question is shown in brackets [ ].

This document has **28** pages. Any blank pages are indicated.

© UCLES 2021

Data

speed of light in free space	$c = 3.00 \times 10^{8}\,\text{m s}^{-1}$
permeability of free space	$\mu_0 = 4\pi \times 10^{-7}\,\text{H m}^{-1}$
permittivity of free space	$\varepsilon_0 = 8.85 \times 10^{-12}\,\text{F m}^{-1}$
	$\left(\frac{1}{4\pi\varepsilon_0} = 8.99 \times 10^{9}\,\text{m F}^{-1}\right)$
elementary charge	$e = 1.60 \times 10^{-19}\,\text{C}$
the Planck constant	$h = 6.63 \times 10^{-34}\,\text{J s}$
unified atomic mass unit	$1\,\text{u} = 1.66 \times 10^{-27}\,\text{kg}$
rest mass of electron	$m_e = 9.11 \times 10^{-31}\,\text{kg}$
rest mass of proton	$m_p = 1.67 \times 10^{-27}\,\text{kg}$
molar gas constant	$R = 8.31\,\text{J K}^{-1}\,\text{mol}^{-1}$
the Avogadro constant	$N_A = 6.02 \times 10^{23}\,\text{mol}^{-1}$
the Boltzmann constant	$k = 1.38 \times 10^{-23}\,\text{J K}^{-1}$
gravitational constant	$G = 6.67 \times 10^{-11}\,\text{N m}^2\,\text{kg}^{-2}$
acceleration of free fall	$g = 9.81\,\text{m s}^{-2}$

© UCLES 2021

Formulae

uniformly accelerated motion	$s = ut + \frac{1}{2}at^2$ $v^2 = u^2 + 2as$
work done on/by a gas	$W = p\Delta V$
gravitational potential	$\phi = -\frac{Gm}{r}$
hydrostatic pressure	$p = \rho gh$
pressure of an ideal gas	$p = \frac{1}{3}\frac{Nm}{V}\langle c^2 \rangle$
simple harmonic motion	$a = -\omega^2 x$
velocity of particle in s.h.m.	$v = v_0 \cos \omega t$ $v = \pm \omega \sqrt{(x_0^2 - x^2)}$
Doppler effect	$f_o = \frac{f_s v}{v \pm v_s}$
electric potential	$V = \frac{Q}{4\pi\varepsilon_0 r}$
capacitors in series	$1/C = 1/C_1 + 1/C_2 + \ldots$
capacitors in parallel	$C = C_1 + C_2 + \ldots$
energy of charged capacitor	$W = \frac{1}{2}QV$
electric current	$I = Anvq$
resistors in series	$R = R_1 + R_2 + \ldots$
resistors in parallel	$1/R = 1/R_1 + 1/R_2 + \ldots$
Hall voltage	$V_H = \frac{BI}{ntq}$
alternating current/voltage	$x = x_0 \sin \omega t$
radioactive decay	$x = x_0 \exp(-\lambda t)$
decay constant	$\lambda = \frac{0.693}{t_{\frac{1}{2}}}$

© UCLES 2021

[Turn over

Answer **all** the questions in the spaces provided.

1 **(a)** With reference to velocity and acceleration, describe uniform circular motion.

.....

.....

..... [2]

(b) Two cars are moving around a horizontal circular track. One car follows path X and the other follows path Y, as shown in Fig. 1.1.

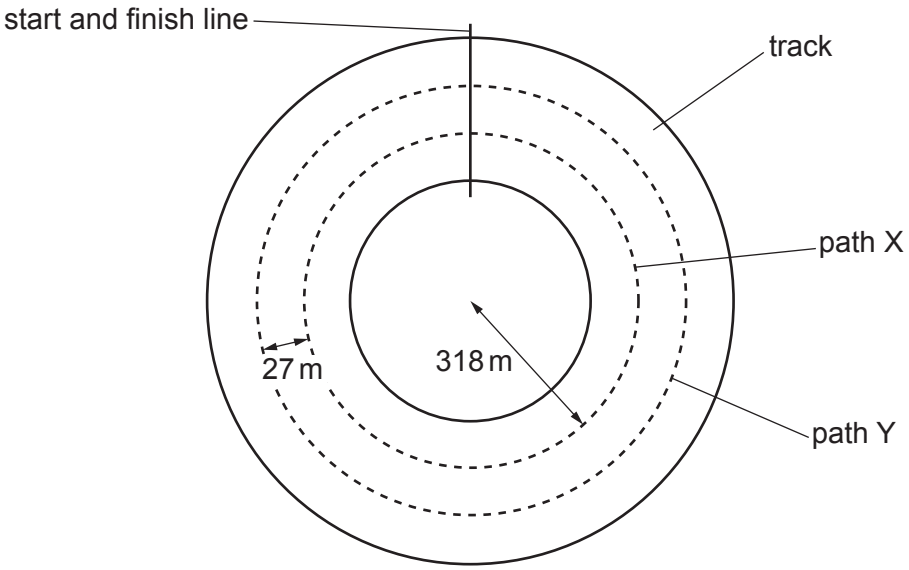

Fig. 1.1 (not to scale)

The radius of path X is 318 m. Path Y is parallel to, and 27 m outside, path X. Both cars have mass 790 kg. The maximum lateral (sideways) friction force F that the cars can experience without sliding is the same for both cars.

(i) The maximum speed at which the car on path X can move around the track without sliding is 94 m s^{-1}.

Calculate F.

F = ... N [2]

(ii) Both cars move around the track. Each car has the maximum speed at which it can move without sliding.

Complete Table 1.1, by placing one tick in each row, to indicate how the quantities indicated for the car on path Y compare with the car on path X.

Table 1.1

	Y less than X	Y same as X	Y greater than X
centripetal acceleration			
maximum speed			
time taken for one lap of the track			

[3]

[Total: 7]

2 **(a)** Define *gravitational potential*.

.....

.....

..... [2]

(b) The Earth E and the Moon M can both be considered as isolated point masses at their centres. The mass of the Earth is 5.98×10^{24} kg and the mass of the Moon is 7.35×10^{22} kg. The Earth and the Moon are separated by a distance of 3.84×10^{8} m, as shown in Fig. 2.1.

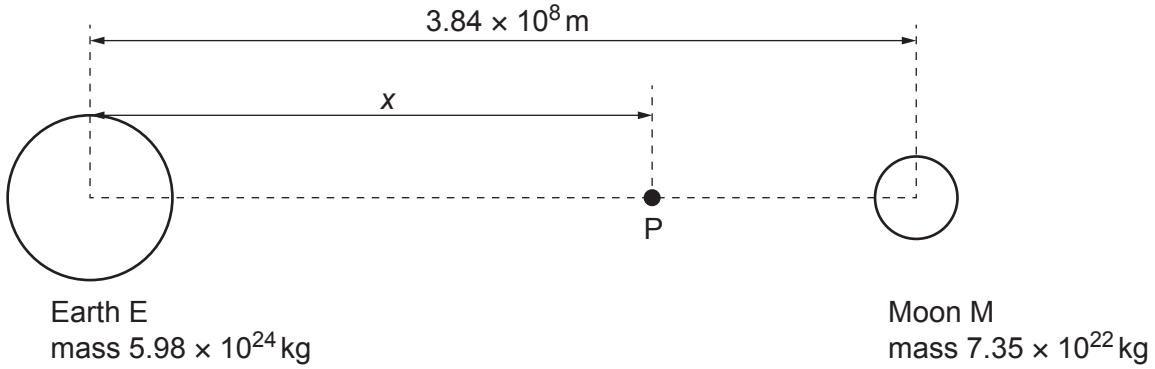

Fig. 2.1 (not to scale)

P is a point, on the line joining the centres of E and M, where the resultant gravitational field strength is zero. Point P is at a distance *x* from the centre of the Earth.

(i) Explain how it is possible for the gravitational field strength to be zero despite the presence of two large masses nearby.

.....

.....

..... [2]

(ii) Show that *x* is approximately 3.5×10^{8} m.

[2]

(iii) Calculate the gravitational potential ϕ at point P.

ϕ = ... $J\,kg^{-1}$ [3]

[Total: 9]

3 **(a)** Define *specific heat capacity*.

.....

.....

..... [2]

(b) A sealed container of fixed volume V contains N molecules, each of mass m, of an ideal gas at pressure p.

(i) State an expression, in terms of V, N, p and the Boltzmann constant k, for the thermodynamic temperature T of the gas.

..... [1]

(ii) Show that the mean translational kinetic energy E_K of a molecule of the gas is given by

$$E_K = \frac{3}{2}kT.$$

[2]

(iii) Explain why the internal energy of the gas is equal to the total kinetic energy of the molecules.

.....

.....

..... [2]

(c) The gas in **(b)** is supplied with thermal energy Q.

(i) Explain, with reference to the first law of thermodynamics, why the increase in internal energy of the gas is Q.

.....

.....

..... [2]

© UCLES 2021

(ii) Use the expression in **(b)(ii)** and the information in **(c)(i)** to show that the specific heat capacity c of the gas is given by

$$c = \frac{3k}{2m}.$$

[2]

(d) The container in **(b)** is now replaced with one that does not have a fixed volume. Instead, the gas is able to expand, so that the pressure of the gas remains constant as thermal energy is supplied.

Suggest, with a reason, how the specific heat capacity of the gas would now compare with the value in **(c)(ii)**.

.....

.....

.....

..... [2]

[Total: 13]

4 A trolley on a track is attached by springs to fixed blocks X and Y, as shown in Fig. 4.1. The track contains many small holes through which air is blown vertically upwards. This results in the trolley resting on a cushion of air rather than being in direct contact with the track.

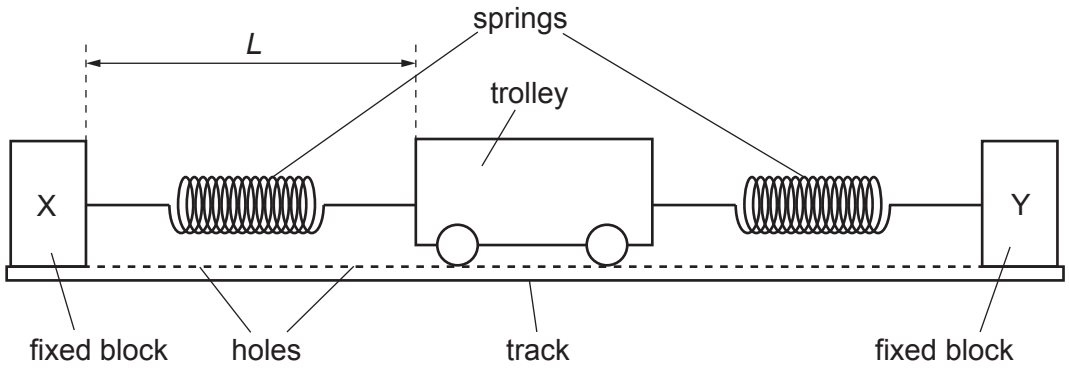

Fig. 4.1

The trolley is pulled to one side of its equilibrium position and then released so that it oscillates initially with simple harmonic motion. After a short time, the air blower is switched off. The variation with time *t* of the distance *L* of the trolley from block X is shown in Fig. 4.2.

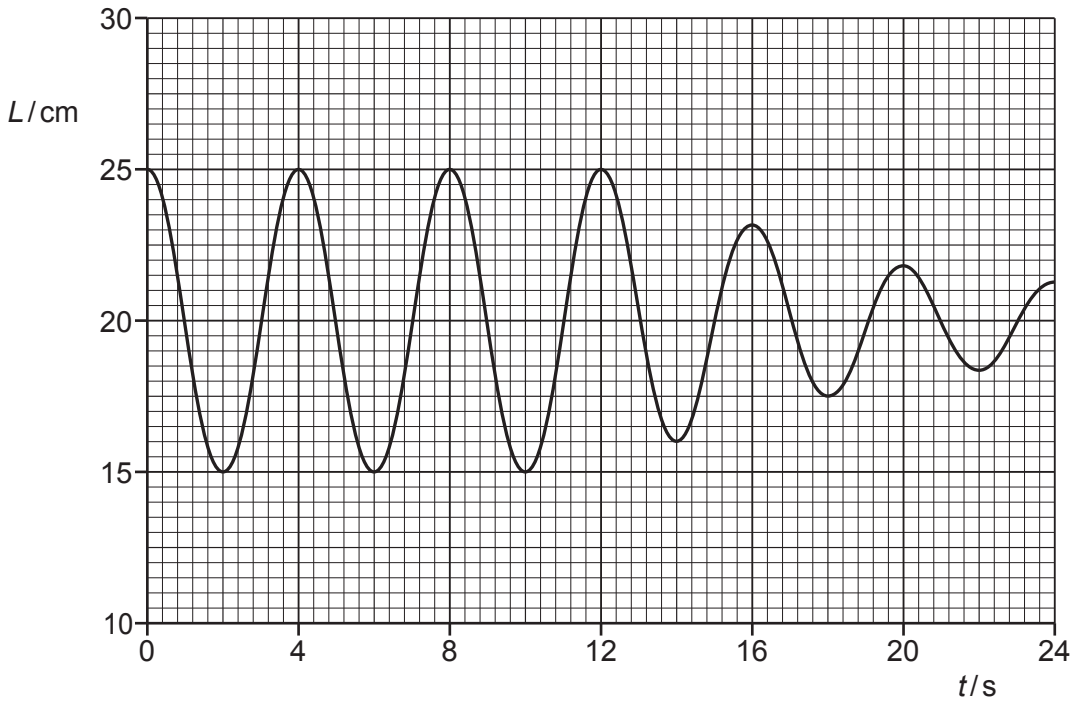

Fig. 4.2

(a) Use Fig. 4.2 to determine:

(i) the initial amplitude of the oscillations

amplitude = ... cm [1]

© UCLES 2021

(ii) the angular frequency ω of the oscillations

ω = ... rad s^{-1} [2]

(iii) the maximum speed v_0, in cm s^{-1}, of the oscillating trolley.

v_0 = ... cm s^{-1} [2]

(b) Apart from the quantities in **(a)**, describe what may be deduced from Fig. 4.2 about the motion of the trolley between time t = 0 and time t = 24 s. No calculations are required.

.....

.....

.....

.....

..... [3]

(c) On Fig. 4.3, sketch the variation with L of the velocity v of the trolley for its first complete oscillation.

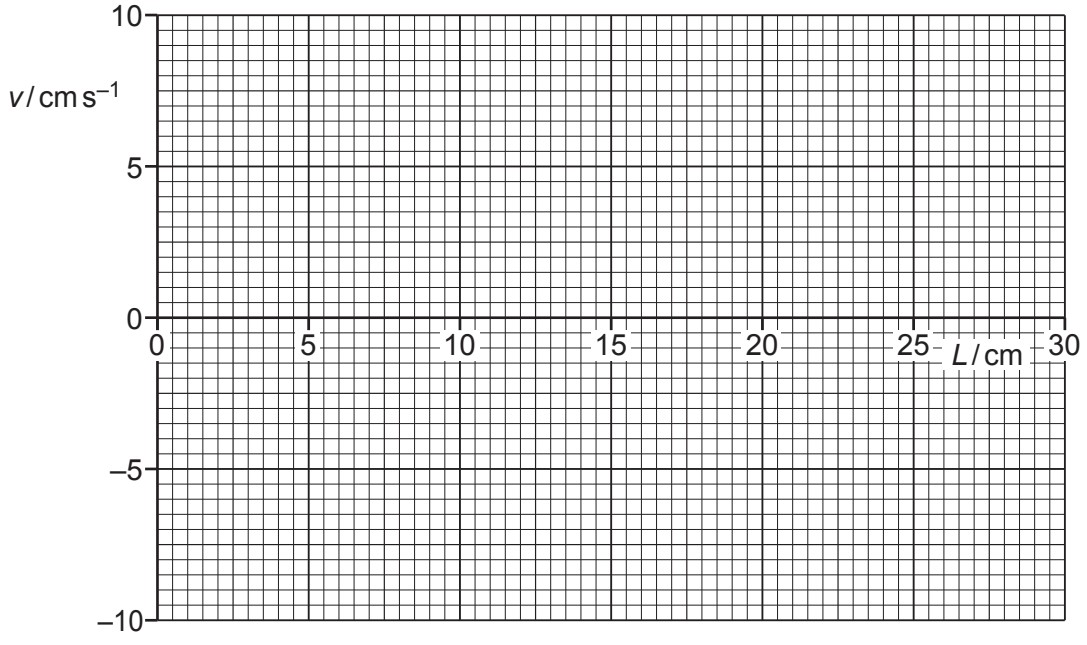

Fig. 4.3

[3]

[Total: 11]

BLANK PAGE

5 An analogue signal is to be transmitted to a receiver. Before transmission, the signal passes through an analogue-to-digital converter (ADC). After transmission it passes through a digital-to-analogue converter (DAC) before finally reaching the receiver, as shown in Fig. 5.1.

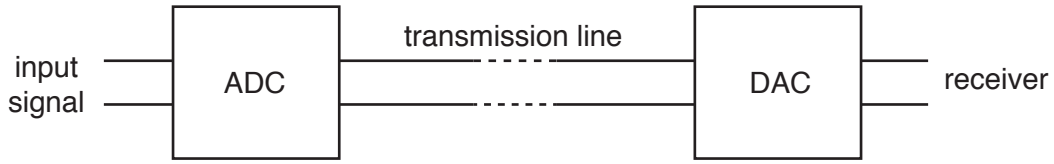

Fig. 5.1

(a) State **two** advantages of converting the signal into digital form for transmission.

1. .....

.....

2. .....

.....

[2]

(b) The variation with time of the potential difference (p.d.) of the input signal is shown in Fig. 5.2.

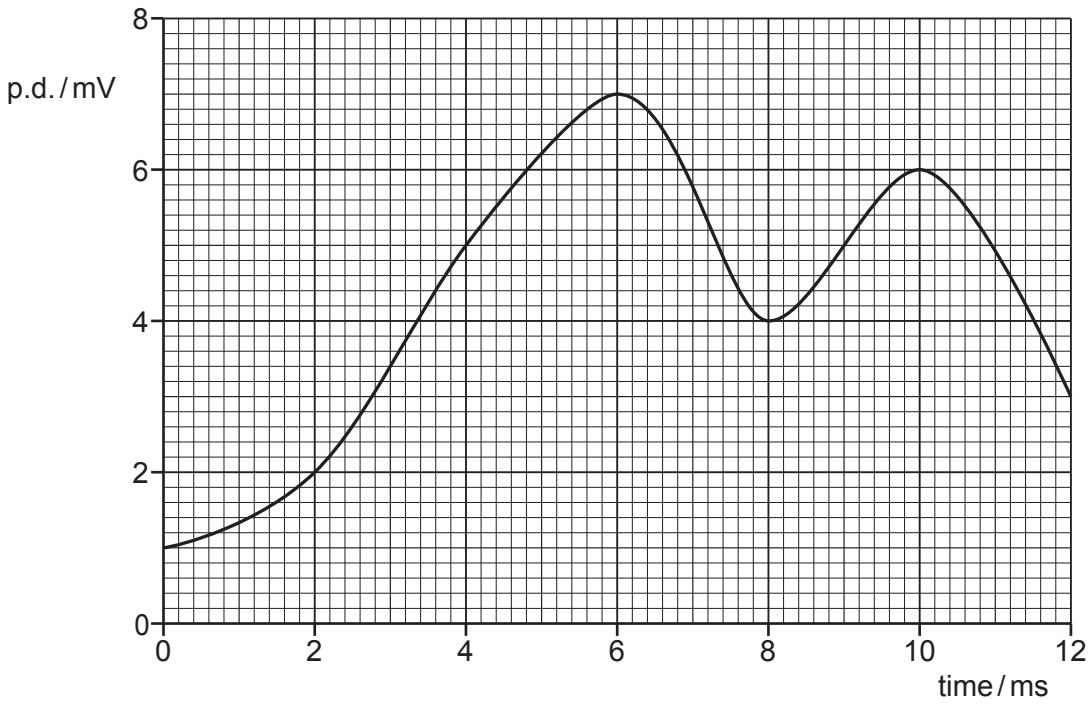

Fig. 5.2

The ADC has a sampling frequency of 250 Hz and uses 4-bit sampling, with the least significant bit corresponding to 1 mV. The signal is first sampled at time 0, when the sampled bits are 0001.

(i) State the sampled bits at time 4 ms and time 8 ms.

4 ms: ..... 8 ms: ..... [1]

(ii) Part of the signal received by the receiver, after the sampled signal has passed through the DAC, is shown in Fig. 5.3.

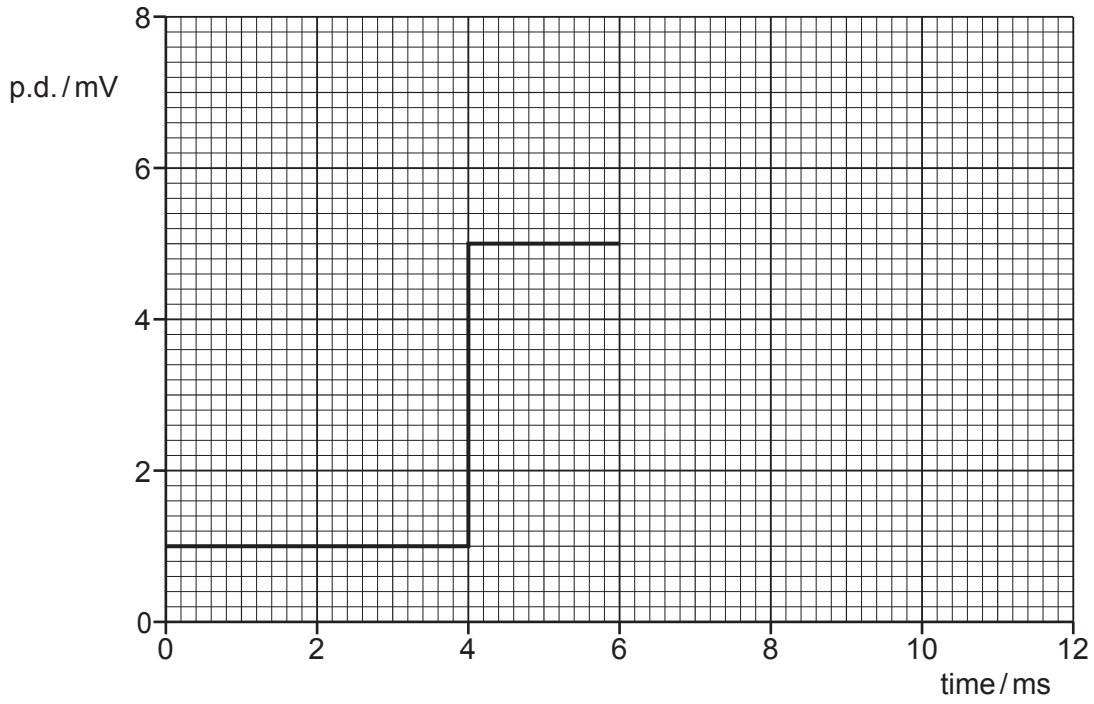

Fig. 5.3

On Fig. 5.3, complete the line to show the received signal for time 0 to time 12 ms. [2]

(c) The ADC in **(b)** is replaced with one that has a sampling frequency of 500 Hz and uses 3-bit sampling, with the least significant bit corresponding to 2 mV.

On Fig. 5.4, sketch the signal that is now received, after passing through the DAC, from time 0 to time 12 ms.

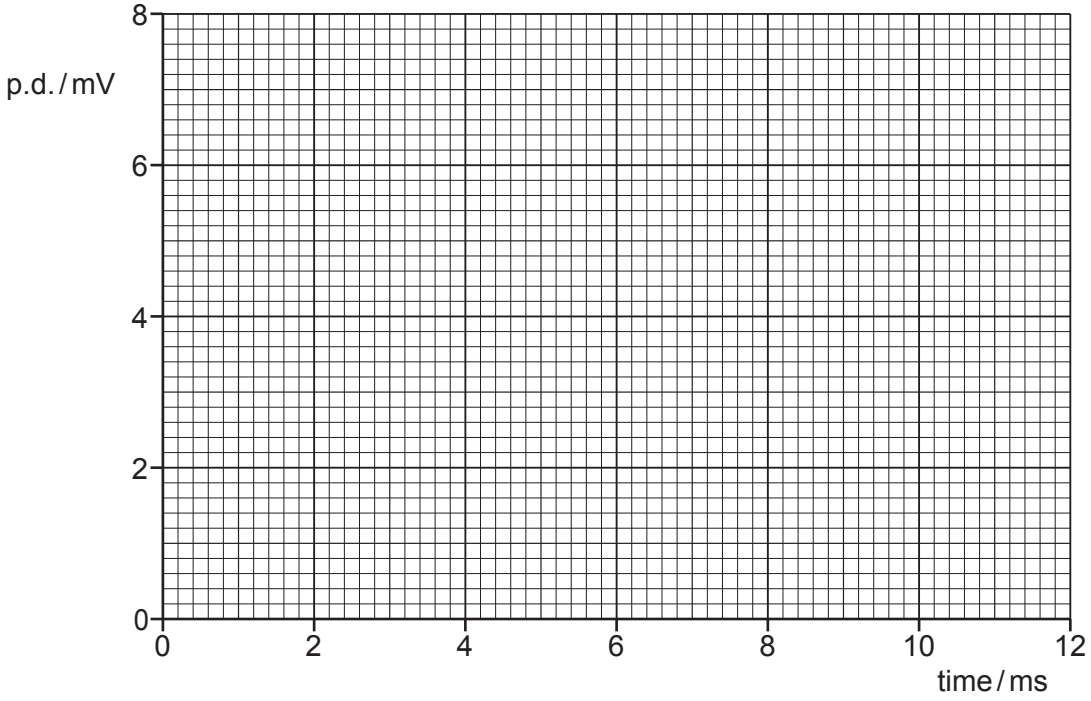

Fig. 5.4

[3]

[Total: 8]

6 **(a)** A capacitor consists of two parallel metal plates, separated by air, at a variable distance x apart, as shown in Fig. 6.1. The capacitance C is inversely proportional to x.

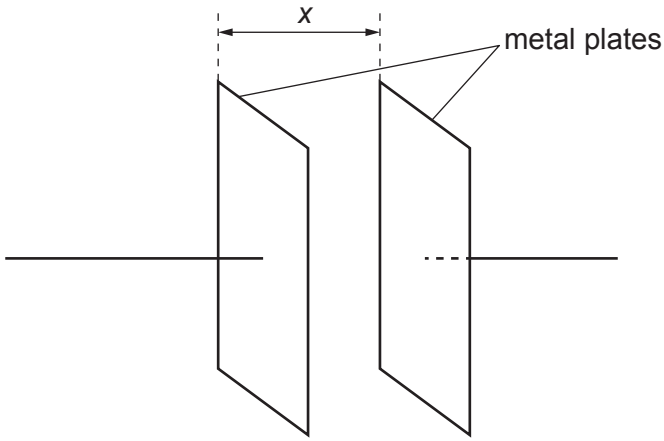

Fig. 6.1

The capacitor is charged by a supply so that there is a potential difference (p.d.) V between the plates.

State expressions, in terms of C and V, for the charge Q on one of the plates and for the energy E stored in the capacitor.

Q = ... E = ... [1]

(b) The charged capacitor in **(a)** is now disconnected from the supply. The plates of the capacitor are initially separated by distance L. They are then moved closer together by a distance D, as shown in Fig. 6.2.

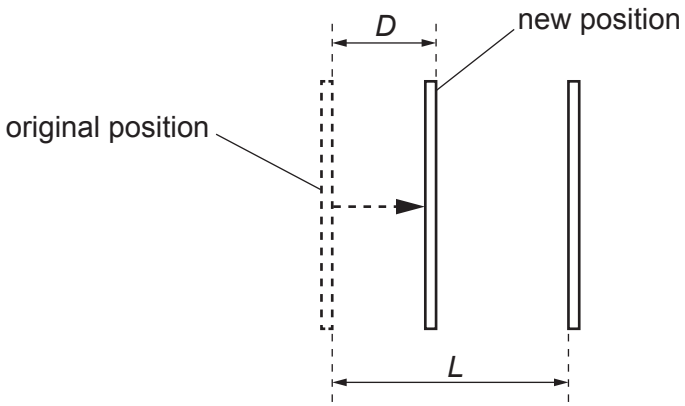

Fig. 6.2

State expressions, in terms of C, V, L and D, for:

(i) the new capacitance C_N

C_N = ... [1]

(ii) the new charge Q_N on one of the plates

Q_N = ... [1]

(iii) the new p.d. V_N between the plates.

V_N = ... [1]

(c) Explain whether reducing the separation of the plates in **(b)** results in an increase or decrease in the energy stored in the capacitor.

.....

.....

..... [1]

[Total: 5]

7 **(a)** State **two** properties of an ideal operational amplifier (op-amp).

1. .....

.....

2. .....

..... [2]

(b) Fig. 7.1 shows a circuit that includes an ideal op-amp and two identical resistors R.

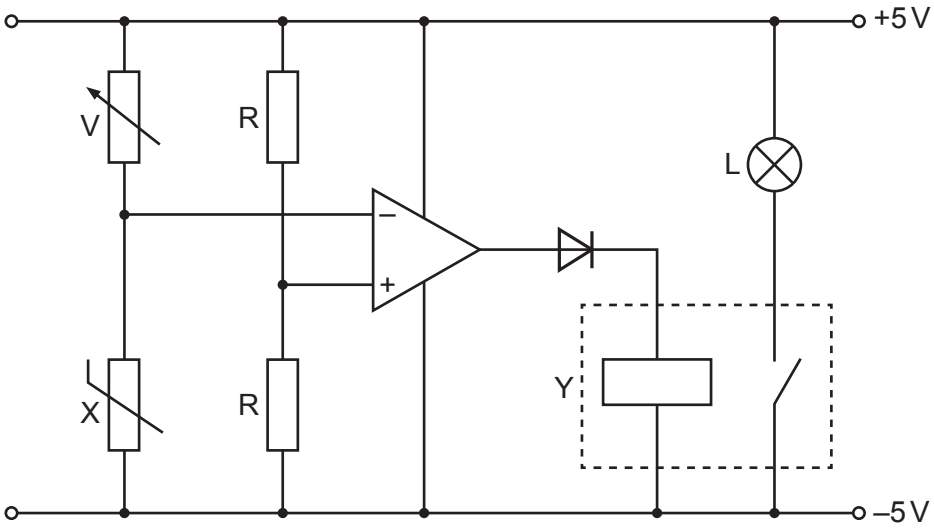

Fig. 7.1

State the names of components X and Y.

X: ..... Y: ..... [1]

(c) **(i)** Explain why the op-amp in Fig. 7.1 has only two possible output states.

.....

.....

.....

..... [2]

(ii) State the name of the type of op-amp circuit in which the op-amp behaves as in **(c)(i)**.

..... [1]

(iii) Describe the environmental condition under which the lamp L in Fig. 7.1 will light.

.....

.....

..... [2]

(iv) Suggest the purpose of the variable resistor V in the circuit.

.....

..... [1]

[Total: 9]

8 **(a)** Define the *tesla*.

.....

.....

..... [2]

(b) A stiff metal wire is used to form a rectangular frame measuring 8.0 cm × 6.0 cm. The frame is open at the top, and is suspended from a sensitive newton meter, as shown in Fig. 8.1.

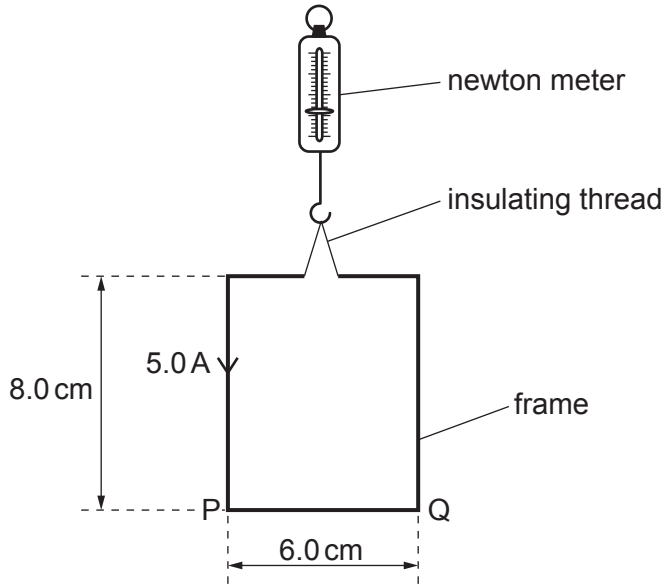

Fig. 8.1

The open ends of the frame are connected to a power supply so that there is a current of 5.0 A in the frame in the direction indicated in Fig. 8.1.

The frame is slowly lowered into a uniform magnetic field of flux density *B* so that all of side PQ is in the field. The magnetic field lines are horizontal and at an angle of 50° to PQ, as shown in Fig. 8.2.

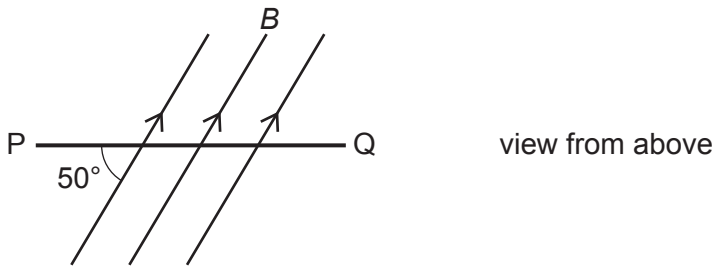

Fig. 8.2

When side PQ of the frame first enters the magnetic field, the reading on the newton meter changes by 1.0 mN.

(i) Determine the magnetic flux density B, in mT.

B = ... mT [2]

(ii) State, with a reason, whether the change in the reading on the newton meter is an increase or a decrease.

.....

.....

..... [1]

(iii) The frame is lowered further so that the vertical sides start to enter the magnetic field.

Suggest what effect this will have on the frame.

.....

.....

..... [1]

[Total: 6]

9 **(a)** State, by reference to the power dissipated in a resistor, what is meant by the *root-mean-square* (*r.m.s.*) value of an alternating voltage.

.....

.....

.....

..... [2]

(b) A coil is rotating freely, on frictionless bearings, at constant speed in a uniform magnetic field. This rotation causes an induced alternating electromotive force (e.m.f.) across the open terminals of the coil. The induced e.m.f. has r.m.s. value 12 V and frequency 50 Hz.

The speed of rotation of the coil is now doubled.

(i) State and explain, with reference to the principles of electromagnetic induction, the effect of the increased speed of rotation on the r.m.s. value of the induced e.m.f.

.....

.....

.....

..... [2]

(ii) On Fig. 9.1, sketch the variation with time t of the induced e.m.f. E across the terminals of the coil at the **increased** speed of rotation. Your line should extend from time $t = 0$ to time $t = 20$ ms. Assume that $E = 0$ when $t = 0$.

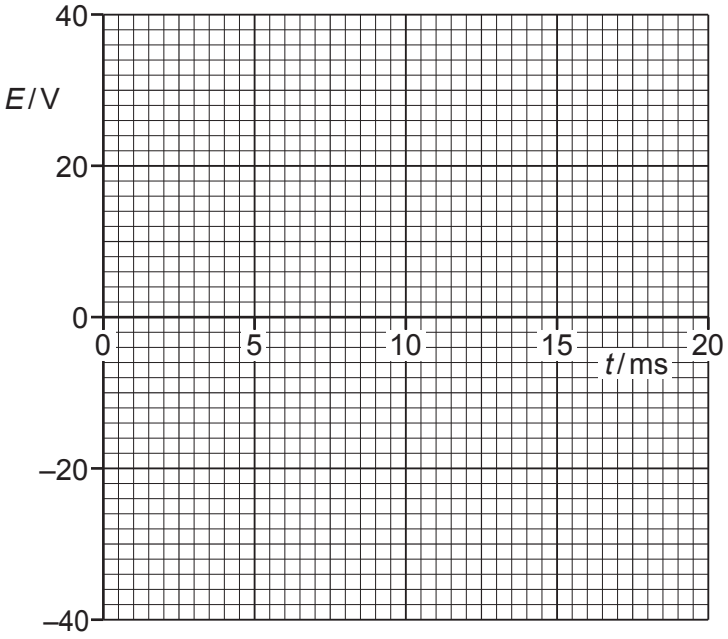

Fig. 9.1

[3]

(c) State and explain the effect on the motion of the coil in **(b)** of connecting a load resistor across its terminals.

.....

.....

.....

..... [2]

[Total: 9]

10 **(a)** State an experimental phenomenon that provides evidence for:

(i) the particulate nature of electromagnetic radiation

..... [1]

(ii) the wave nature of matter.

..... [1]

(b) A particle of matter moves with momentum p.

(i) State the equation that gives the effective wavelength λ of the particle. State the name of any other symbols used.

[2]

(ii) State the name given to the wavelength of the moving particle.

..... [1]

(c) Electrons are accelerated from rest through a potential difference (p.d.) of 4.8 kV.

(i) Show that the final speed of the electrons is $4.1 \times 10^7\,\text{m s}^{-1}$.

[2]

(ii) Calculate the effective wavelength of a beam of electrons moving at the speed in **(c)(i)**.

wavelength = ... m [2]

[Total: 9]

11 **(a)** State, for an X-ray image, what is meant by:

(i) *sharpness*

.....

..... [1]

(ii) *contrast*.

.....

..... [1]

(b) A parallel X-ray beam passes through a thickness of 2.3 cm of soft body tissue. The intensity of the emerging beam is 12% of the intensity of the incident beam.

Calculate the linear attenuation (absorption) coefficient μ of the soft body tissue. Give a unit with your answer.

μ = ... unit ..... [3]

(c) In medical diagnosis, X-rays may be used to produce a single X-ray image or may be used in computed tomography (CT scanning).

Suggest an advantage and a disadvantage of CT scanning compared with single X-ray imaging for diagnosis.

advantage: .....

.....

disadvantage: .....

.....
[2]

[Total: 7]

12 (a) Define radioactive *decay constant*.

.....

.....

..... [2]

(b) A sample of radioactive iodine-131 ($^{131}_{53}\mathrm{I}$) of mass 5.87×10^{-10} kg has an activity of 2.92×10^{9} Bq.

Determine the decay constant of iodine-131.

decay constant = ... s^{-1} [3]

(c) Suggest **two** reasons why a detector placed near to the sample in **(b)** would record a count rate much less than 2.92×10^{9} counts per second.

1. .....

.....

2. .....

.....

[2]

[Total: 7]

© UCLES 2021

BLANK PAGE

BLANK PAGE

Permission to reproduce items where third-party owned material protected by copyright is included has been sought and cleared where possible. Every reasonable effort has been made by the publisher (UCLES) to trace copyright holders, but if any items requiring clearance have unwittingly been included, the publisher will be pleased to make amends at the earliest possible opportunity.

To avoid the issue of disclosure of answer-related information to candidates, all copyright acknowledgements are reproduced online in the Cambridge Assessment International Education Copyright Acknowledgements Booklet. This is produced for each series of examinations and is freely available to download at www.cambridgeinternational.org after the live examination series.

Cambridge Assessment International Education is part of the Cambridge Assessment Group. Cambridge Assessment is the brand name of the University of Cambridge Local Examinations Syndicate (UCLES), which itself is a department of the University of Cambridge.

© UCLES 2021